	REVISIONS					
ZONE	LTR.	DESCRIPTION	ECN NO.	DATE	BY	APPR'D
	REL	RELEASED FOR PRODUCTION	DR16481 71530	21MAY08	SLK	DJC
3A 4C	A	A1 UPDATE ASSEMBLY TO PUMP CAP/DOME COVER PLATE DESIGN A2 ADD WIRE HARNESS DETAIL A3 RV0000316 WAS RV0000318 A4 TU223 WAS FM0002029 ON CHART DRAWING SA00044973	DR23287 71893 72066 72143	11MAY09	WDE	DJC
3A	B	B1 REPLACED "HOT STAMP INFO" WITH "MARKING INFO"	73288	26JAN11	SLK	DJC

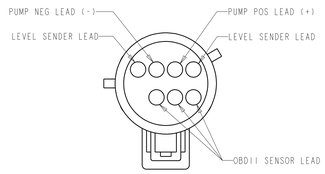

CONNECTOR MODULE MAIN PINOUT DETAIL
SCALE 2:1

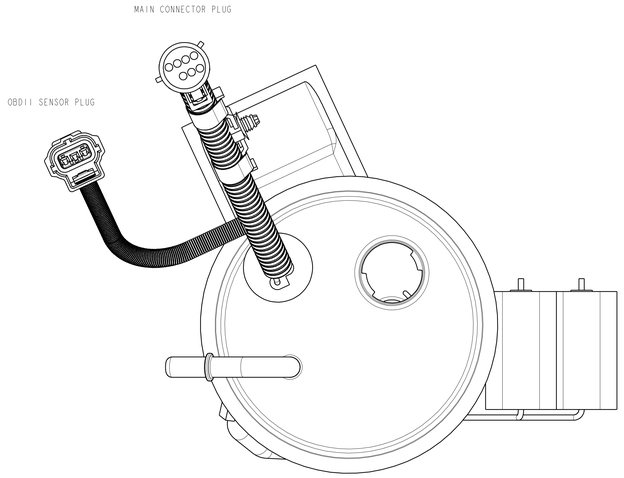

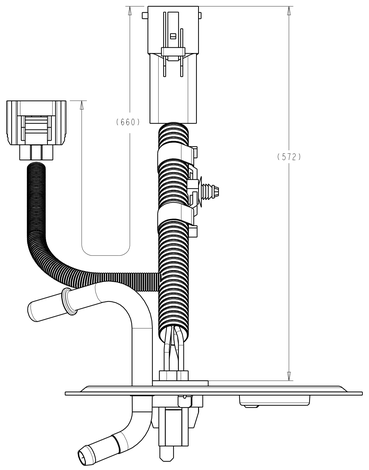

4 WIRE HARNESS DETAIL

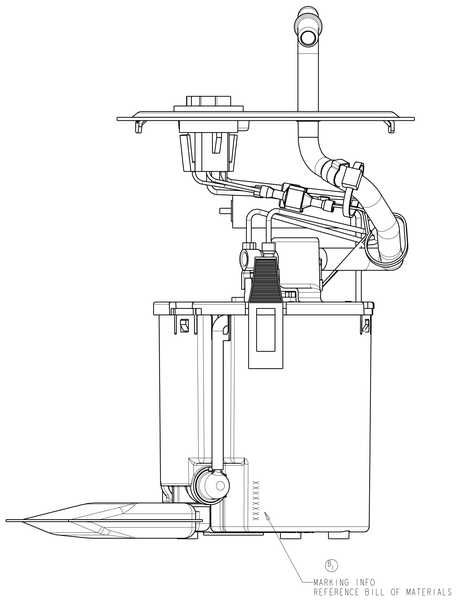

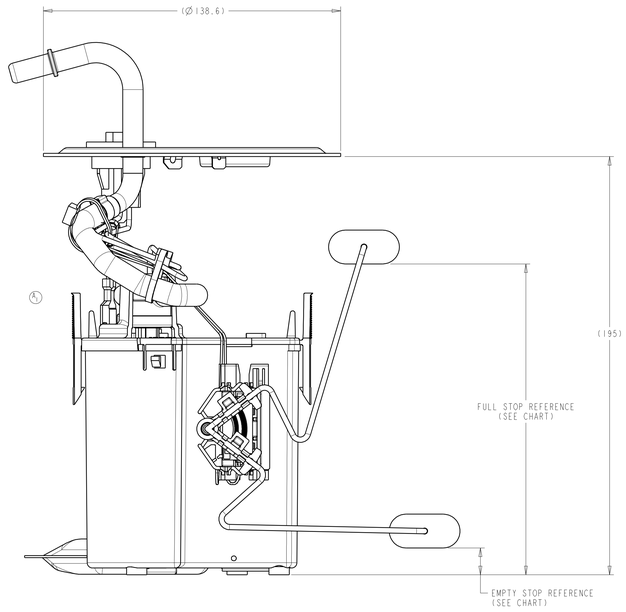

FLOAT POSITION	RESISTANCE (OHMS)
FULL STOP (144.5)	160.5±3.0
EMPTY STOP (10.0)	15±1

NOTE:

1. SPECIAL CUSTOMER PACKAGING REQUIREMENTS MAY CALL FOR THE ADDITION OF SPECIFIC LABELS NOT SHOWN ON THIS DRAWING.
2. SHOWN WIRE ROUTING MAY DIFFER FROM FINISHED PRODUCT.
3. SHOWN RESISTOR CARD AND PUMP TERMINATION MAY DIFFER FROM FINISHED PRODUCT.

TI Automotive CONFIDENTIAL AND PROPRIETARY
THIS DRAWING IS PROPERTY OF TI Automotive. TI Automotive CLAIMS PROPRIETARY RIGHTS IN THE INFORMATION DISCLOSED ON THIS DRAWING. BY ACCEPTANCE HOLDER AGREES TO RETURN THE PROPERTY ON REQUEST. THE DRAWING IS PROVIDED FOR REFERENCE PURPOSES ONLY AND DO NOT CONSTITUTE A WARRANTY. THE INFORMATION CONTAINED IN THIS DRAWING IS NOT TO BE DISCLOSED TO OTHERS OR USED FOR THE PURPOSE OF MANUFACTURE BY OR PROCUREMENT FROM OTHERS WITHOUT THE EXPRESS WRITTEN PERMISSION OF TI Automotive. TI Automotive CLAIMS THE LICENSE OR OTHER RIGHT TO REVOKE OR IMPLEDE OF THE PROCESSION OF THIS DRAWING.

4 NOTES ASSEMBLY/TEST/PROCESS
S DENOTES SAFETY CHARACTERISTIC
◊ DENOTES SIGNIFICANT CHARACTERISTIC

INTERNAL USE ONLY
DISTRIBUTION CODE
AF

REF- FM0002029

DO NOT SCALE PRINT

DIMENSIONS AND TOLERANCES PER ANSI/ASME Y14.5M - 1994

PROJECTION: PRO-E

TI Automotive
AFTERMARKET DIVISION
630 COLUMBIA STREET
CARO, MICHIGAN 48723

SIZE: E	TOLERANCE UNLESS OTHERWISE SPECIFIED: X ±0.76, .X ±0.25, .XX ±0.12, ANGLE ±1/2°, CONCEN. 0.08	MATERIAL	SCALE: 1:1
		FINISH	DATE: 21MAY08
			DRN. BY: S.KADY
			CHK'D BY:
			APPR'D BY: D.CATLIN

TITLE: FUEL MODULE OUTLINE

DRAWING NO.: TU223

REV.: B